MALE END VIEW	FEMALE END VIEW

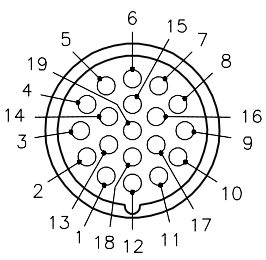

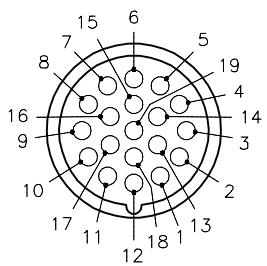

1 = BLACK #1
2 = WHITE #1
3 = DRAIN #1
4 = BLACK #2
5 = WHITE #2
6 = DRAIN #2
7 = BLACK #3
8 = WHITE #3
9 = DRAIN #3
10 = BLACK #4
11 = WHITE #4
12 = DRAIN #4
13 = BLACK #5
14 = WHITE #5
15 = DRAIN #5
16 = BLACK #6
17 = WHITE #6
18 = DRAIN #6
19 = GREEN/YELLOW

M23 connector *M23 connector*

WIRING DIAGRAM

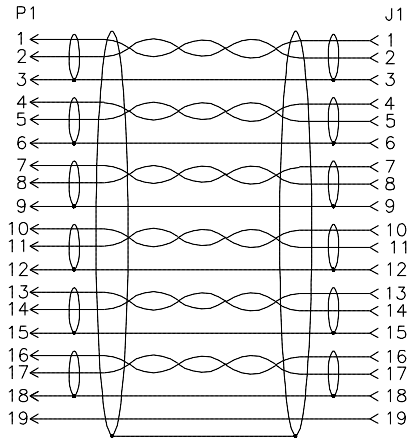

SPECIFICATIONS

CONTACT CARRIER MATERIAL	NYLON or PBT
MOLDED HEAD MATERIAL/COLOR	TPU/BLACK
CONTACT MATERIAL/PLATING	BRASS/GOLD
COUPLING NUT MATERIAL/PLATING	BRASS/NICKEL
RATED CURRENT [A]	2.0 A
RATED VOLTAGE [V]	150 V
OUTER JACKET MATERIAL/COLOR	PVC/PLUM
CONDUCTOR INSULATION MATERIAL	PVC
NUMBER OF CONDUCTORS [AWG]	12x22 AWG; 1x18 AWG
DRAIN/SHIELD	6x22 AWG DRAINS/INDIVIDUALLY SHIELDED, 100% OVERALL SHIELD; 1x22 AWG OVERALL DRAIN
CONDUCTOR ARRANGEMENT	6 SHIELDED TWISTED PAIR W/DRAIN, 1 GND, 1 DRAIN
TEMPERATURE RANGE	−40˚C to +105˚C (−40˚F to +221˚F)
PROTECTION CLASS	MEETS IEC IP67
CABLE RATINGS	UL: ITC/PLTC/AWM, 105C, 300V CSA: CMG/AWM, 105C, 300V

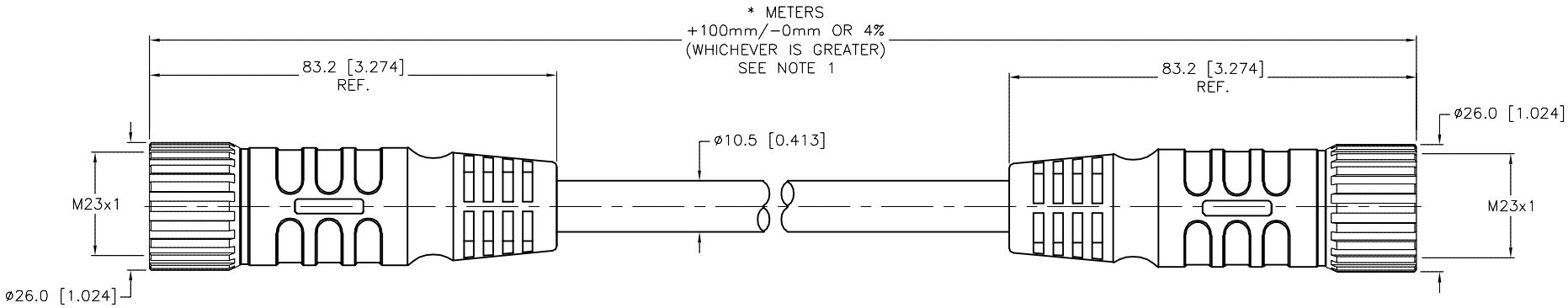

SOURCE DRAWING - FOR REFERENCE ONLY

NOTES:

1. "*" INDICATES CABLE LENGTH IN METERS. CONTACT TURCK TO ORDER SPECIFIC LENGTHS.

REV	DESCRIPTION	BY	DATE	ECO NO.
B	UPDATE RATED CURRENT	NF	04/09/19	69299

RELATED DOCUMENTS
1.
2.
3.
4.

3RD ANGLE PROJECTION

THIS DRAWING IS CONFIDENTIAL AND THE PROPERTY OF TURCK INC. USE OF THIS DOCUMENT WITHOUT WRITTEN PERMISSION IS PROHIBITED.

TURCK

3000 CAMPUS DRIVE
MINNEAPOLIS, MN 55441
1-800-544-7769
(763) 553-7300
(763) 553-0708 fax
www.turck.us

MATERIAL: SEE SPECIFICATIONS

FINISH: SEE SPECIFICATIONS

ALL DIMENSIONS DISPLAYED ON THIS DRAWING ARE FOR REFERENCE ONLY

CONTACT TURCK FOR MORE INFORMATION

DRFT: TV | DATE: 09/09/15
APVD: H.D. | SCALE: 1=1.3

UNIT OF MEASUREMENT
MILLIMETER [INCH]
DO NOT SCALE THIS DRAWING

DESCRIPTION: P-CSM CKM 19-195-*

IDENTIFICATION NO.

REV: B

FILE: 777036177 | SHEET 1 OF 1

Approved 04/09/2019, work order #189218 by T.S.